INSTALLATION, OPERATION, AND MAINTENANCE MANUAL
WELKER® CLEANFLOW™ F-31

DRAWING NUMBERS
AD285CS
AD285CS.8
AD285CZ
AD285DA
AD285DB.1

MANUAL NUMBER
IOM-174

REVISION
Rev. C, 10/13/2023

IMPORTANT SAFETY INFORMATION
READ ALL INSTRUCTIONS

Notes emphasize information and/or provide additional information to assist the user.

Caution messages appear before procedures that could result in damage to equipment if not observed.

Warning messages appear before procedures that could result in personal injury if not observed.

This manual is intended to be used as a basic installation and operation guide for the Welker® CleanFlow™ F-31. For comprehensive instructions, please refer to the IOM Manuals for each individual component. A list of relevant component IOM Manuals is provided in Appendix A of this manual.

The information in this manual has been carefully checked for accuracy and is intended to be used as a guide for the installation, operation, and maintenance of the Welker® equipment described in this manual. Correct installation and operation, however, are the responsibility of the end user. Welker® reserves the right to make changes to this manual and all products in order to improve performance and reliability.

BEFORE YOU BEGIN

Read these instructions completely and carefully.

IMPORTANT – Save these instructions for local inspector's use.

IMPORTANT – Observe all governing codes and ordinances.

Note to Installer – Leave these instructions with the end user.

Note to End User – Keep these instructions for future reference.

Installation of this CleanFlow™ F-31 is of a mechanical nature.

Proper installation is the responsibility of the installer. Product failure due to improper installation is not covered under the warranty.

If you received a damaged CleanFlow™ F-31, please contact a Welker® representative immediately.

Phone: 281.491.2331
Address: 13839 West Bellfort Street
Sugar Land, TX 77498

SECTION 1: PRODUCT INFORMATION

1.1 Introduction

We appreciate your business and your choice of Welker® products. The installation, operation, and maintenance liability for this equipment becomes that of the purchaser at the time of receipt. Reading the applicable *Installation, Operation, and Maintenance* (IOM) *Manuals* prior to installation and operation of this equipment is required for a full understanding of its application and performance prior to use.*

If you have any questions, please call Welker® at 1.281.491.2331.

**The following procedures have been written for use with standard Welker® parts and equipment. Assemblies that have been modified may have additional requirements and specifications that are not listed in this manual.*

1.2 Product Description

The Welker® *CleanFlow™ F-31* is designed to properly condition natural gas or instrument air for use as a pneumatic instrument supply. The system incorporates filters to remove unwanted elements from the instrument supply. This system has two (2) options for operation: single filter and dual filter. In single filter operation, the backup filter can be put into service in the event the primary filter becomes obstructed and requires maintenance, reducing interruption to operation. In dual filter operation (2" FNPT and outlet), the primary and backup filters operate simultaneously, increasing flow rate.

Equipment can be added to the CleanFlow™ F-31 to diagnose decreased flow to the downstream instrument. A pressure drop on the optional differential pressure gauge may be an indication that the primary and/or backup filter is not functioning and that maintenance is required. A color change in the optional moisture indicator is a sign the filter cartridge is saturated and must be replaced.

Welker® may custom design the CleanFlow™ F-31 to suit the particular application and specifications of each customer.

1.3 Specifications

The specifications listed in this section are generalized for this equipment. Welker® can modify the equipment according to your company's needs. **Please note that the specifications may vary depending on the customization of your equipment.**

Table 1: CleanFlow™ F-31 Specifications	
Products	Natural Gas and Instrument Air
Materials of Construction	316/316L Stainless Steel, Buna, Carbon Steel, and PTFE
Maximum Allowable Operating Pressure	1500 psig @ -20 °F to 150 °F (*103 barg @ -28 °C to 65 °C*)
Connections	**Single Filter Operation:** 1" FNPT Inlet and Outlet; ¼" FNPT Drain **Dual Filter Operation:** 2" FNPT Inlet and Outlet; ¼" FNPT Drain
Flow Rate	**Single Filter Operation:** Up to 182 scfm **Dual Filter Operation:** Up to 300 scfm
Nominal Filter Rating	3 Micron
Filter Media	Silica Gel and Activated Charcoal Others Available
Feature	Two (2) Welker® F-31 Filter/Dryers
Weight	Approximately 300 lb
Dimensions	48″ x 12″ x 62¾″
Options	Differential Pressure Gauge Moisture Indicator Outlet Relief Valve

1.4 Equipment Diagrams

Figure 1: Standard CleanFlow™ F-31 Connections Diagram

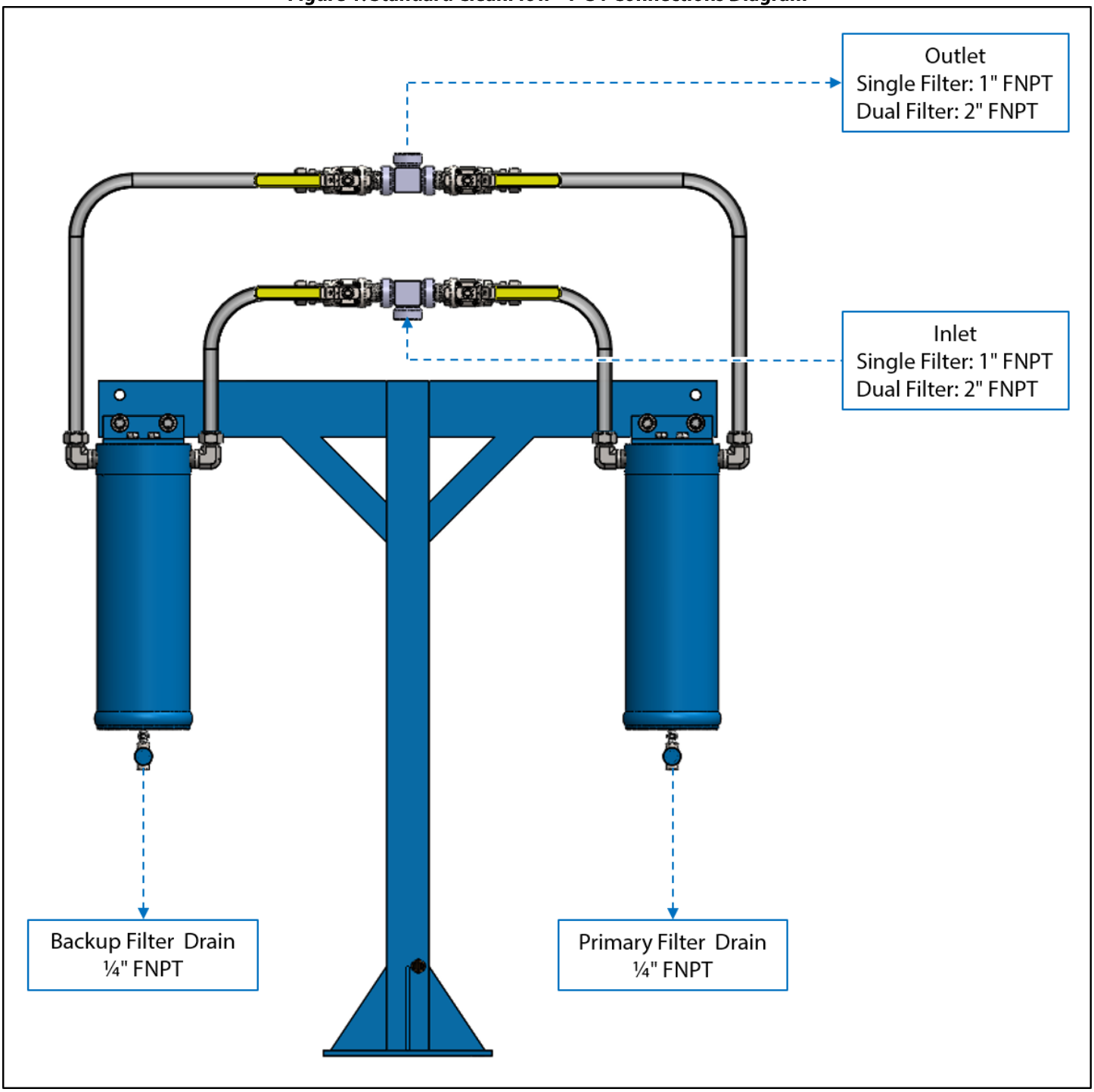

Figure 2: CleanFlow™ F-31 With Optional Differential Pressure Gauge Connections Diagram

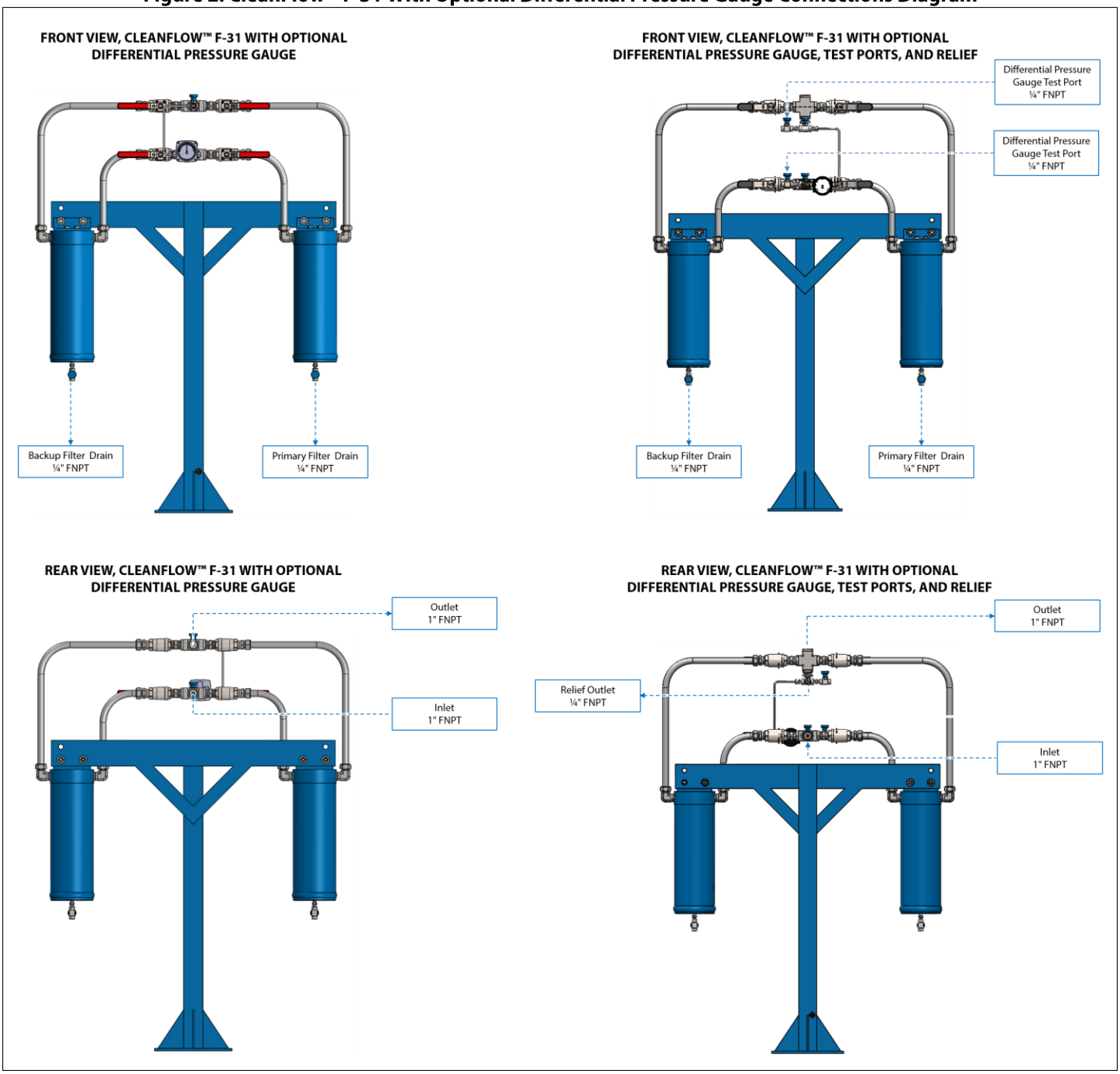

Figure 3: CleanFlow™ F-31 Diagram

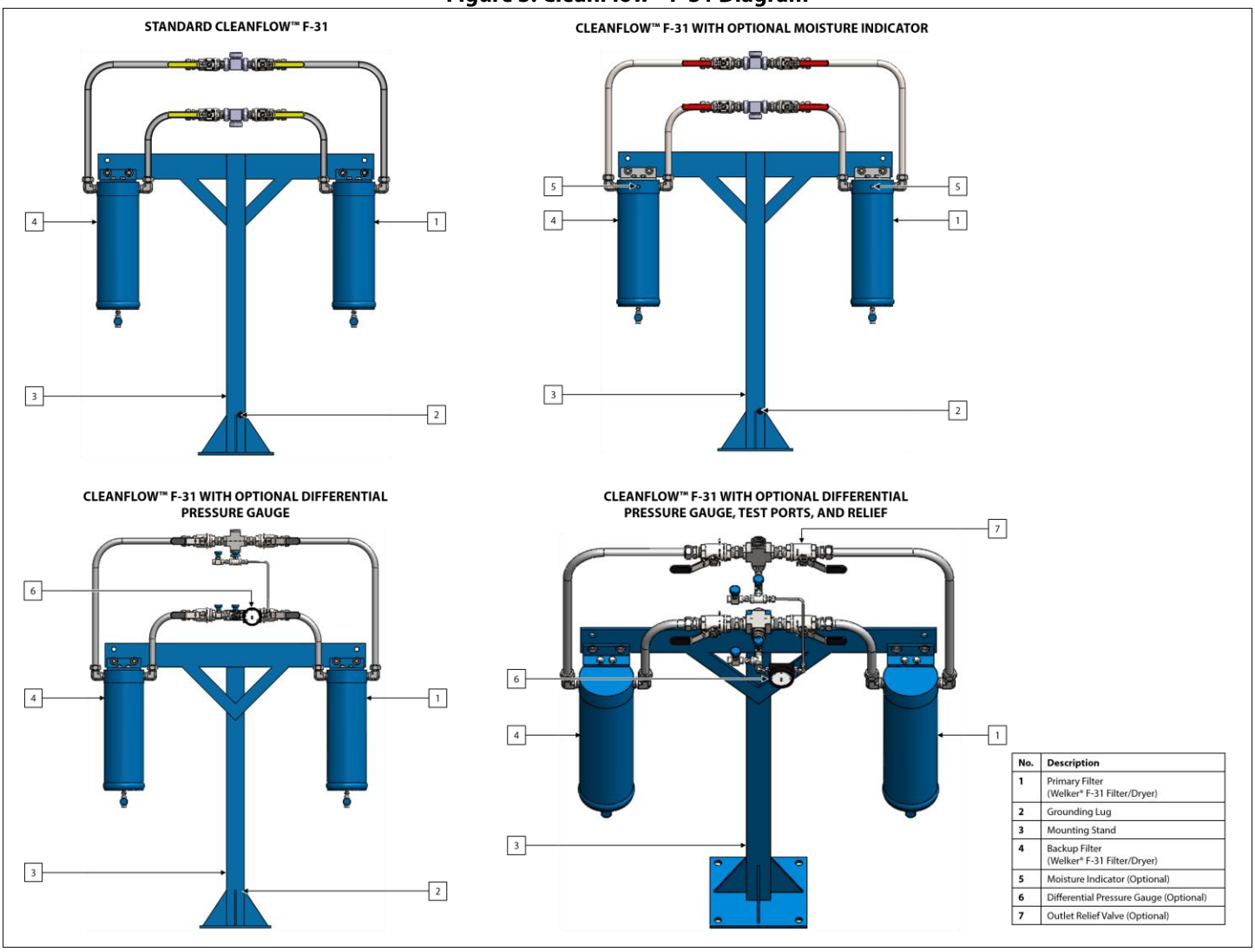

No.	Description
1	Primary Filter (Welker® F-31 Filter/Dryer)
2	Grounding Lug
3	Mounting Stand
4	Backup Filter (Welker® F-31 Filter/Dryer)
5	Moisture Indicator (Optional)
6	Differential Pressure Gauge (Optional)
7	Outlet Relief Valve (Optional)

Figure 4: CleanFlow™ F-31 Valve Diagram

STANDARD CLEANFLOW™ F-31

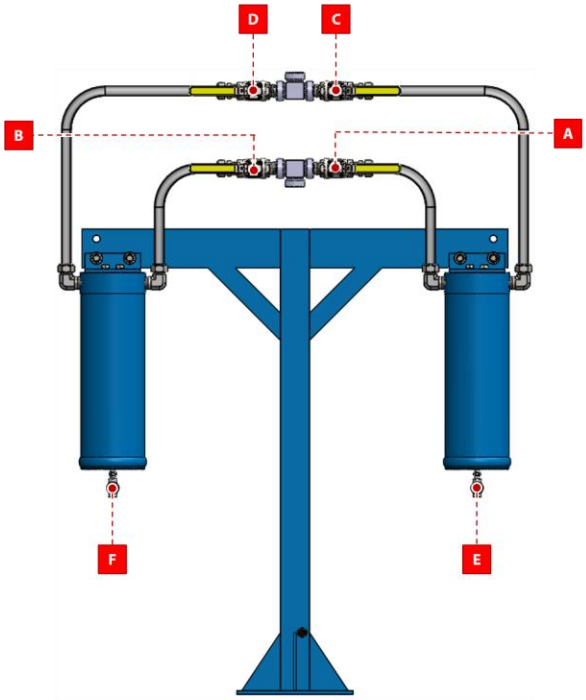

CLEANFLOW™ F-31 WITH OPTIONAL DIFFERENTIAL PRESSURE GAUGE

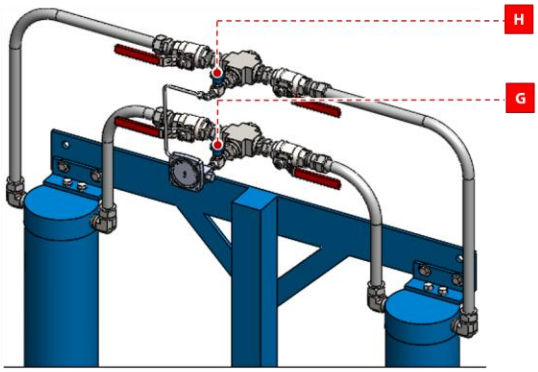

CLEANFLOW™ F-31 WITH OPTIONAL DIFFERENTIAL PRESSURE GAUGE, TEST PORTS, AND RELIEF

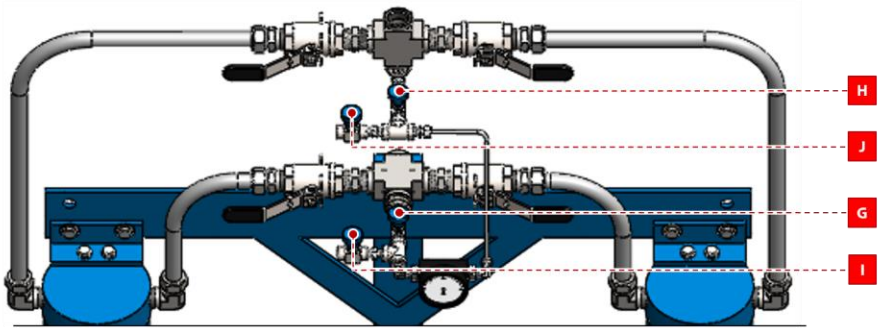

No.	Description
A	Primary Filter Inlet Valve
B	Backup Filter Inlet Valve
C	Primary Filter Outlet Valve
D	Backup Filter Outlet Valve
E	Primary Filter Drain Valve
F	Backup Filter Drain Valve
G	Inlet Pressure Valve (Optional)
H	Outlet Pressure Valve (Optional)
I	Differential Pressure Gauge Test Valve 1 (Optional)
J	Differential Pressure Gauge Test Valve 2 (Optional)

2.1 Before You Begin

After unpacking the unit, check the equipment for compliance and any damage that may have occurred during shipment. Immediately contact a Welker® representative if you received damaged equipment.

When sealing fittings with PTFE tape, refer to the proper sealing instructions for the brand used.

2.2 Installation

Welker® recommends installing a pressure gauge and relief upstream and downstream of the CleanFlow™ F-31.

1. Secure the mounting stand to the floor or ground according to the bolt pattern (*Figure 5*).

Figure 5: Bolt Pattern

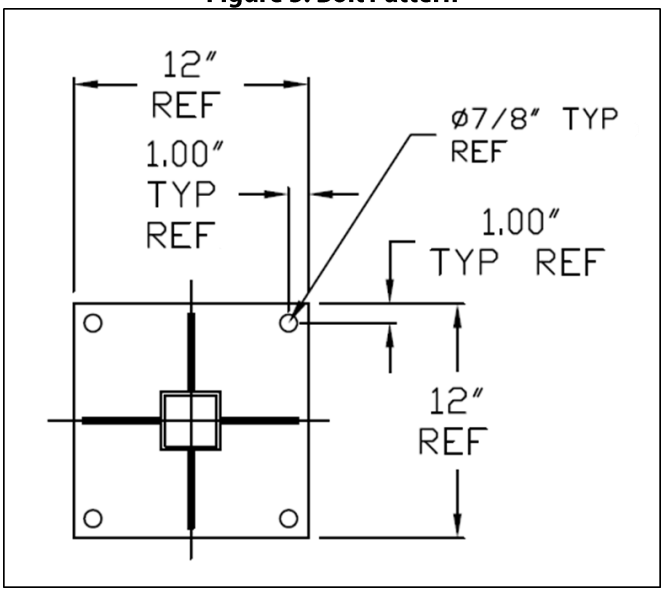

2. Connect a grounding wire to the grounding lug near the base of the mounting stand to safely ground the CleanFlow™ F-31 (*Figure 3*).
3. Ensure that all valves on the CleanFlow™ F-31 are closed (*Figure 4*).
4. Connect the inlet of the CleanFlow™ F-31 to a pressurized supply source (*Figure 1* or *Figure 2*).
5. Connect the outlet of the CleanFlow™ F-31 to the instrument to be supplied with the conditioned natural gas or instrument air (*Figure 1* or *Figure 2*).
6. If the CleanFlow™ F-31 is equipped with the optional outlet relief valve, connect from the relief to a safe vent if required (*Figure 2*).
7. As necessary, connect from primary filter drain valve E and backup filter drain valve F to a safe vent (*Figure 1* or *Figure 2*).
8. Open the valve of the pressurized supply source to begin supply flow to the CleanFlow™ F-31.
9. For single filter operation, continue to step 10. For dual filter operation, proceed to step 14.

Single Filter Operation

10. Open primary filter inlet valve A and primary filter outlet valve C (*Figure 4*).
11. If the CleanFlow™ F-31 is equipped with the optional differential pressure gauge, slowly open inlet pressure valve G and outlet pressure valve H simultaneously (*Figure 4*).
12. If a valve is installed between the CleanFlow™ F-31 and the instrument to be supplied with the conditioned natural gas or instrument air, open that valve to allow the pneumatic supply to reach the instrument.
13. The unit is now operational.

In single filter operation, a pressure drop on a downstream gauge or a pressure increase on the optional differential pressure gauge may be an indication that the primary filter is not functioning and that the backup filter needs to be put into service. Maintenance on the primary filter may be required.

If the color of the optional moisture indicator has changed from blue to pink, this is an indication that the filter cartridge is saturated and needs to be replaced.

Dual Filter Operation

14. Open primary filter inlet valve A, backup filter inlet valve B, primary filter outlet valve C, and backup filter outlet valve D (*Figure 4*).
15. If the CleanFlow™ F-31 is equipped with the optional differential pressure gauge, slowly open inlet pressure valve G and outlet pressure valve H simultaneously (*Figure 4*).
16. If a valve is installed between the CleanFlow™ F-31 and the instrument to be supplied with the conditioned natural gas or instrument air, open that valve to allow the pneumatic supply to reach the instrument.
17. The unit is now operational.

In dual filter operation, a pressure drop on a downstream gauge or a pressure increase on the optional differential pressure gauge may be an indication that one or both filters are not functioning and that operations should be halted for maintenance.

If the color of the optional moisture indicator has changed from blue to pink, this is an indication that the filter cartridge is saturated and needs to be replaced.

3.1 Before You Begin

1. **Welker® recommends that the unit have standard yearly maintenance.** Based on the operating conditions and/or site requirements, adjustments to the maintenance schedule may be necessary.
2. Prior to maintenance or disassembly of the unit, it is advisable to have a repair kit available for repairs of the system in case of unexpected wear or faulty seals.

New seals supplied in spare parts kits should be lightly lubricated before being installed to ease the installation of the seals and reduce the risk of damage when positioning them on parts. Wipe excess lubricant from the seals, as it may adversely affect analytical instrument results.

For sample-exposed seals, Welker® recommends non-hydrocarbon-based lubricants, such as Krytox®.
For non-sample-exposed seals, Welker® recommends either non-hydrocarbon-based lubricants or silicone-based lubricants, such as Molykote® 111.

After the seals are installed, the outer diameter of shafts and inner diameter of cylinders may be lubricated to allow smooth transition of parts.

3. All maintenance and cleaning of the unit should be performed on a smooth, clean surface.
4. Welker® recommends having the following tools available for maintenance. Please note that the exact tools required may vary by model.
    a. 12" Wrench
    b. 24" Wrench
    c. Rubber Pipe Wrench With a Minimum Diameter of 7"
    d. Seal Pick

3.2 Maintenance for Single Filter Operation

1. Determine how quickly free liquids accumulate in the primary filter by frequently opening primary filter drain valve E (*Figure 4*).
2. If the CleanFlow™ F-31 is equipped with the optional differential pressure gauge, close inlet pressure valve G and outlet pressure valve H prior to performing maintenance to protect the gauge from damage (*Figure 4*). If applicable, ensure that differential pressure gauge test valve 1 I and differential pressure gauge test valve 2 J are closed (*Figure 4*).

<u>Maintenance on Primary Filter While Maintaining Supply to Instrument</u>

To maintain supply to the instrument while performing maintenance on the primary filter, the backup filter must be put into service.

3. Close primary filter inlet valve A and primary filter outlet valve C, and then open backup filter inlet valve B and backup filter outlet valve D (*Figure 4*). This will put the backup filter into service.
4. Slowly open primary filter drain valve E to vent any pressure remaining in the primary filter assembly (*Figure 4*).

STOP

The filter/dryers must be depressurized prior to performing maintenance on the CleanFlow™ F-31.

Figure 6: Welker® F-31 Filter/Dryer Diagram

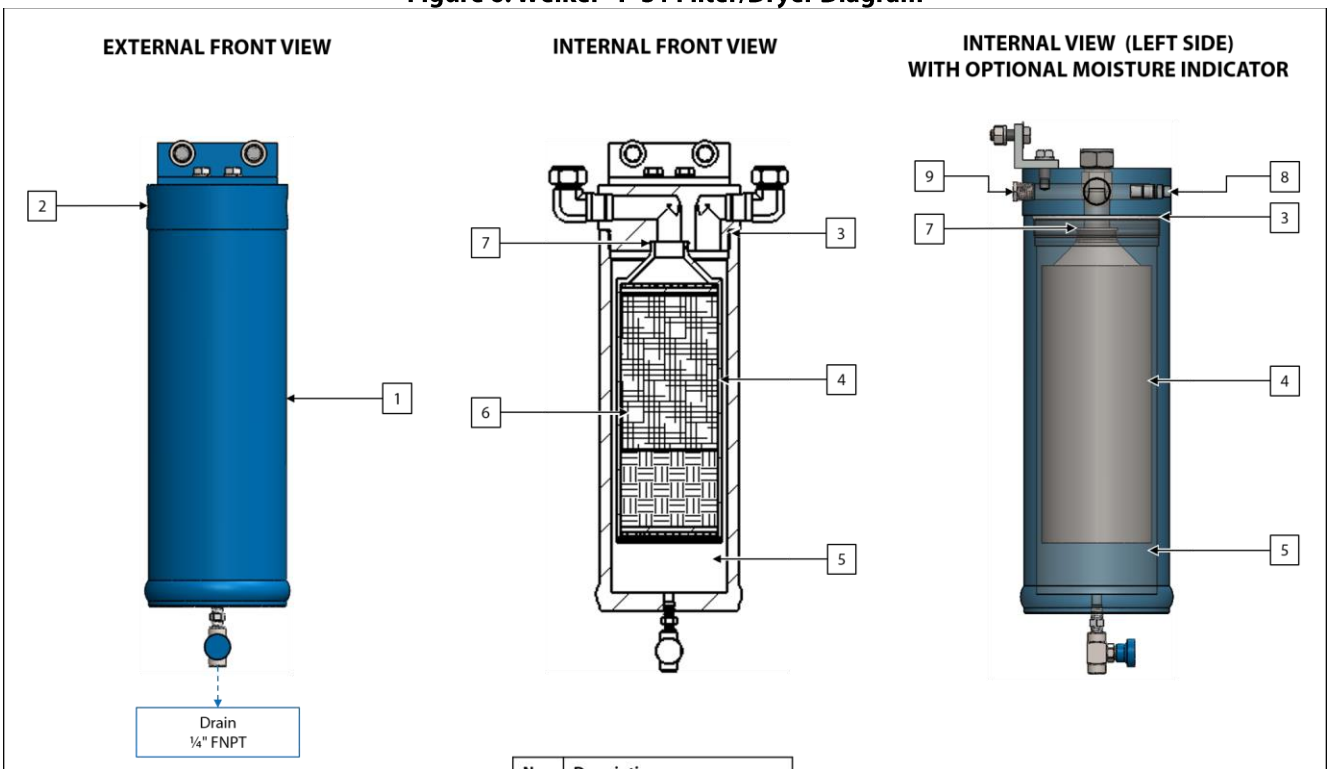

No.	Description
1	Body
2	Top Cap
3	O-ring
4	Filter Cartridge
5	Liquid Collection Area
6	Filter Media
7	O-ring
8	Moisture Indicator (Optional)
9	Plug (Optional)

5. Unscrew the body of the primary filter from the top cap (*Figure 3* and *Figure 6*).
6. Remove the filter cartridge (*Figure 6*).
7. If necessary, replace the O-rings in the top cap (*Figure 6*).
8. If the primary filter is equipped with the optional moisture indicator and the moisture indicator has changed from blue to pink, the moisture indicator needs to be replaced. Remove the plug from the top cap, and then push the moisture indicator out through this unplugged port (*Figure 6*). Install a new moisture indicator and return the plug to the port in the back of the top cap.
9. Install the replacement filter cartridge (*Figure 6*).
10. Apply a small amount of anti-galling compound or thread lubricant to the top cap threads.
11. Fully screw the body onto the top cap.
12. Close primary filter drain valve E (*Figure 4*).
13. Slowly open primary filter inlet valve A (*Figure 4*). Check for leaks and repair as necessary.
14. Open primary filter outlet valve C (*Figure 4*).
15. Close backup filter inlet valve B and backup filter outlet valve D to resume single filter operation (*Figure 4*).
16. Maintenance may now be performed on the backup filter.

Maintenance on the Backup Filter While Maintaining Supply to the Instrument

To maintain supply to the instrument while performing maintenance on the backup filter, the primary filter must be put into service.

17. If the CleanFlow™ F-31 is equipped with an optional differential pressure gauge, ensure that inlet pressure valve G and outlet pressure valve H are closed (*Figure 4*). If applicable, ensure that differential pressure gauge test valve 1 I and differential pressure gauge test valve 2 J are closed (*Figure 4*).
18. Ensure that backup filter inlet valve B and backup filter outlet valve D are closed and that primary filter inlet valve A and primary filter outlet valve C are open (*Figure 4*).
19. Slowly open backup filter drain valve F to vent any pressure remaining in the backup filter assembly (*Figure 4*).

STOP

The filter/dryers must be depressurized prior to performing maintenance on the CleanFlow™ F-31.

20. Unscrew the body of the backup filter from the top cap (*Figure 3* and *Figure 6*).
21. Remove the filter cartridge (*Figure 6*).
22. If necessary, replace the O-rings in the top cap (*Figure 6*).
23. If the backup filter is equipped with the optional moisture indicator and the moisture indicator has changed from blue to pink, the moisture indicator needs to be replaced. Remove the plug from the top cap, and then push the moisture indicator out through this unplugged port (*Figure 6*). Install a new moisture indicator and return the plug to the port in the back of the top cap.
24. Install the replacement filter cartridge (*Figure 6*).
25. Apply a small amount of anti-galling compound or thread lubricant to the top cap threads.
26. Fully screw the body onto the top cap.
27. Close backup filter drain valve F (*Figure 4*).
28. Slowly open backup filter inlet valve B (*Figure 4*).
29. Close backup filter inlet valve B (*Figure 4*).
30. To continue single filter operation, ensure that primary filter inlet valve A and primary filter outlet valve C are open and that backup filter inlet valve B and backup filter outlet valve D are closed (*Figure 4*).
31. If the CleanFlow™ F-31 is equipped with the optional differential pressure gauge, open inlet pressure valve G and outlet pressure valve H simultaneously (*Figure 4*).

3.3 Maintenance for Dual Filter Operation

1. Determine how quickly free liquids accumulate in the filters by frequently opening primary filter drain valve E and backup filter drain valve F (*Figure 4*).
2. Halt all operations of the CleanFlow™ F-31.
3. If the CleanFlow™ F-31 is equipped with the optional differential pressure gauge, close inlet pressure valve G and outlet pressure valve H prior to performing maintenance to protect the gauge from damage (*Figure 4*). If applicable, ensure that differential pressure gauge test valve 1 I and differential pressure gauge test valve 2 J are closed (*Figure 4*).

Maintenance on Primary Filter

4. Close primary filter inlet valve A and primary filter outlet valve C (*Figure 4*).
5. Slowly open primary filter drain valve E to vent any pressure remaining in the primary filter assembly (*Figure 4*).

STOP

The filter/dryers must be depressurized prior to performing maintenance on the CleanFlow™ F-31.

6. Unscrew the body of the primary filter from the top cap (*Figure 3* and *Figure 6*).
7. Remove the filter cartridge (*Figure 6*).
8. If necessary, replace the O-rings in the top cap (*Figure 6*).
9. If the primary filter is equipped with the optional moisture indicator and the moisture indicator has changed from blue to pink, the moisture indicator needs to be replaced. Remove the plug from the top cap, and then push the moisture indicator out through this unplugged port (*Figure 6*). Install a new moisture indicator and return the plug to the port in the back of the top cap.
10. Install the replacement filter cartridge (*Figure 6*).
11. Apply a small amount of anti-galling compound or thread lubricant to the top cap threads.
12. Fully screw the body onto the top cap.
13. Close primary filter drain valve E (*Figure 4*).
14. Maintenance may now be performed on the backup filter.

Maintenance on the Backup Filter

15. Close backup filter inlet valve B and backup filter outlet valve D (*Figure 4*).
16. Slowly open backup filter drain valve F to vent any pressure remaining in the backup filter assembly (*Figure 4*).

> **STOP** The filter/dryers must be depressurized prior to performing maintenance on the CleanFlow™ F-31.

17. Unscrew the body of the backup filter from the top cap (*Figure 3* and *Figure 6*).
18. Remove the filter cartridge (*Figure 6*).
19. If necessary, replace the O-rings in the top cap (*Figure 6*).
20. If the backup filter is equipped with the optional moisture indicator and the moisture indicator has changed from blue to pink, the moisture indicator needs to be replaced. Remove the plug from the top cap, and then push the moisture indicator out through this unplugged port (*Figure 6*). Install a new moisture indicator and return the plug to the port in the back of the top cap.
21. Install the replacement filter cartridge (*Figure 6*).
22. Apply a small amount of anti-galling compound or thread lubricant to the top cap threads.
23. Fully screw the body onto the top cap.
24. Close backup filter drain valve F (*Figure 4*).

Returning the CleanFlow™ F-31 to Operation

25. Slowly open primary filter inlet valve A and backup filter inlet valve B (*Figure 4*). Check for leaks and repair as necessary.
26. Slowly open primary filter outlet valve C and backup filter outlet valve D (*Figure 4*). Check for leaks and repair as necessary.
27. If the CleanFlow™ F-31 is equipped with the optional differential pressure gauge, open inlet pressure valve G and outlet pressure valve H simultaneously (*Figure 4*). Dual filter operation will now resume.

3.4 Testing the Differential Pressure Gauge

1. Prior to testing the differential pressure gauge, ensure that the CleanFlow™ F-31 is in operation (*Table 2* and *Figure 4*).

Table 2: Valve Configuration for Operation			
Valve	**Single Filter Operation: Primary Filter**	**Single Filter Operation: Backup Filter**	**Dual Filter Operation**
A	Open	Closed	Open
B	Closed	Open	Open
C	Open	Closed	Open
D	Closed	Open	Open

2. Ensure that inlet pressure valve G and outlet pressure valve H are closed (*Figure 4*).
3. Connect a customer-supplied pressure source to differential pressure gauge test valves 1 I and 2 J (*Figure 4*).
4. Open differential pressure gauge test valves 1 I and 2 J (*Figure 4*).
5. Test the differential pressure gauge in accordance with company policy.
6. Once testing is complete, close differential pressure gauge test valves 1 I and 2 J, and then disconnect the customer-supplied pressure source (*Figure 4*).
7. Open inlet pressure valve G and outlet pressure valve H simultaneously (*Figure 4*).
8. Normal operation will now resume.

3.5 Troubleshooting Guidelines

Table 3: CleanFlow™ F-31 Troubleshooting Guidelines		
Issues	**Possible Causes**	**Solutions**
Supply from the CleanFlow™ F-31 has dropped or is insufficient.	The inlet and outlet valves of the CleanFlow™ F-31 are not open or are not fully open.	For single filter operation, fully open primary filter inlet valve A and primary filter outlet valve C (*Figure 4*). For dual filter operation, fully open primary filter inlet valve A, backup filter inlet valve B, primary filter outlet valve C, and backup filter outlet valve D (*Figure 4*).
	One or more filters is clogged or filled with liquid.	Open the drain valve on each filter to drain any accumulated free liquids. Maintenance to the filter(s) is required. See *Section 3.2, Maintenance for Single Filter Operation*, or *Section 3.3, Maintenance for Dual Filter Operation*, for instructions.
The optional differential pressure gauge is not reading pressure.	The inlet and outlet valves of the differential pressure gauge are not open.	Open inlet pressure valve G and outlet pressure valve H simultaneously (*Figure 4*).
	The differential pressure gauge is damaged.	Replace the gauge. Contact Welker® for service options.
The color of the optional moisture indicator has changed from blue to pink.	The filter cartridge is saturated.	Replace the filter cartridge and install a new moisture indicator to the filter top cap. See *Section 3.2, Maintenance for Single Filter Operation*, or *Section 3.3, Maintenance for Dual Filter Operation*, for instructions.

APPENDIX A: REFERENCED OR ATTACHED DOCUMENTS

Welker® *Installation, Operation, and Maintenance* (IOM) *Manuals* suggested for use with this unit:

- IOM-046: Welker® F-4, F-5, F-19, F-23, and F-31 Filters/Dryers
- IOM-105: Welker® NV-1 and NV-2 Instrument Valves

Other *Installation, Operation, and Maintenance* (IOM) *Manuals* suggested for use with this unit:

- Ashcroft Inc. Type 1130 Differential Gauge (Welker® IOM-V259)
- KF Technologies Threaded and Grooved-End Floating Ball Valves (Welker® IOM-V260)
- Metso Automation Series 5H & 5HW Value-Line® 1/4" - 2" (DN 6 – 50) 2-Piece High-Pressure Ball Valves (Welker® IOM-V244)
- Swagelok Company Proportional Relief Valves R Series (Welker® IOM-V086)
- WIKA Differential Pressure Gauges Magnetic-Piston Sensing Element Type 700.04 (Welker® IOM-V193)

Welker® drawings and schematics suggested for use with this unit:

- Assembly Drawing: AD285CS (CleanFlow™ F-31 for Single Filter Operation)
- Assembly Drawing: AD285CS.3 (CleanFlow™ F-31 for Dual Filter Operation)
- Assembly Drawing: AD285CZ (CleanFlow™ F-31 With Differential Pressure Gauge, Test Ports, and Outlet Relief Valve)
- Assembly Drawing: AD285DA (CleanFlow™ F-31 With Optional Moisture Indicator)
- Assembly Drawing: AD285DB (CleanFlow™ F-31 With Optional Differential Pressure Gauge)

NOTES

13839 West Bellfort Street
Sugar Land, TX 77498
Phone: 281.491.2331

welker.com